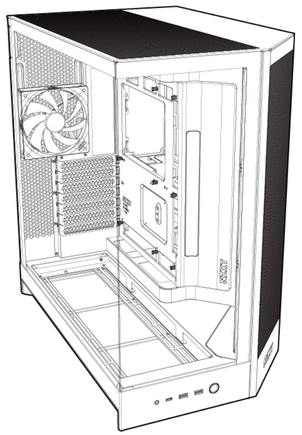
NZXT



H9 FLOW SERIES

LARGE DUAL-CHAMBER MID-TOWER ATX AIRFLOW CASE

FRONT

FRONTAL | AVANT | FRONT | ANTERIORE | FRONTAL | 전면 | フロント | 正面

COVER

TABLE OF CONTENTS

01. EXPLODED VIEW

02. CLEARANCES & SPECIFICATIONS

03. PANEL REMOVAL

04. ACCESSORY BOX

05. CABLE CONNECTIONS

06. BUTTONS & I/O

07. CONTROL HUB (FLOW RGB+ ONLY)

BACK

ATRÁS | ARRIÈRE | ZURÜCK | INDIETRO | VOLTAR | 뒷면 | 裏面 | 背面

08. CABLE MANAGEMENT

09. SSD DRIVE INSTALLATION

10. HDD DRIVE INSTALLATION

11. MOTHERBOARD INSTALLATION

12. EXPANSION CARD INSTALLATION

13. POWER SUPPLY INSTALLATION

14. FAN & RADIATOR SUPPORT

15. FAN & RADIATOR INSTALLATION

限用物质及元素列表
限用物質及元素清單

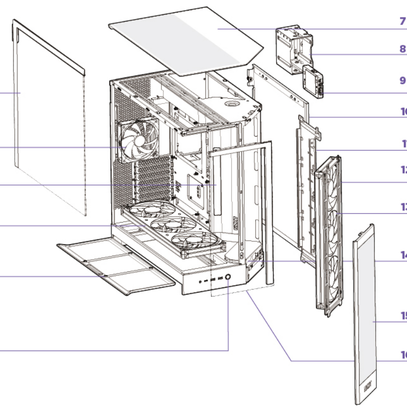
REGULATORY STATEMENT

NZXT GLOBAL WARRANTY POLICY

01. EXPLODED VIEW

VISTA EXPLOSIONADA | VUE ECLATÉE | EXPLOSIONSDARSTELLUNG | VEDUTA IN ESPLOSO | VISTA EXPLODIDA

확대도 | 爆開図 | 部件分解图 | 部件分解圖



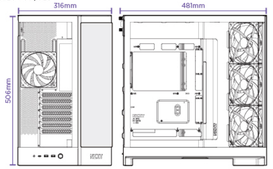
1. Tempered glass panel
2. Rear exhaust Fan
3. Large cable cover
4. Bottom Intake Fans (H9 Flow RGB+ Only)
5. Bottom Filter
6. Front I/O module
7. Top Panel
8. SSD/HDD Cage
9. Control Hub (H9 Flow RGB+ Only)
10. Right side panel
11. SSD Mounting Bracket
12. Removable front radiator/fan bracket
13. Front intake fan
14. Removable floor cover
15. Front Mesh panel
16. Front Tempered Glass Panel

1 . Panel de cristal templado izquierdo	1 . Pannello laterale sinistro di vetro temperato	1 . 左強化ガラスパネル
2 . Ventilador de escape trasero	2 . Ventola di scarico posteriore	2 . リア排出ファン
3 . Cubierta grande para cables	3 . Copertura grande per cavi	3 . 大型ケーブルカバー
4 . Ventiladores de entrada inferiores (solo para H9 Flow RGB+)	4 . Ventole di aspirazione inferiori (solo per H9 Flow RGB+)	4 . ボトム吸気ファン(H9 Flow RGB+のみ)
5 . Filtro inferior	5 . Filtro inferiore	5 . ボトムフィルター
6 . Módulo de E/S frontal	6 . Modulo I/O anteriore	6 . フロント I/O モジュール
7 . Panel superior	7 . Pannello superiore	7 . トップパネル
8 . Jaula de SSD/HDD	8 . Gabbia SSD/HDD	8 . SSD/HDD ケージ
9 . Centro de control (solo para H9 Flow RGB+)	9 . Control Hub (solo per H9 Flow RGB+)	9 . コントロールハブ(H9 Flow RGB+専用)
10 . Panel lateral derecho	10 . Pannello laterale destro	10 . 右サイドパネル
11 . Soporte de montaje SSD	11 . Staffa di montaggio SSD	11 . SSD マウントブラケット
12 . Soporte de radiador/ventilador frontal extraíble	12 . Radiatore anteriore/staffa ventola amovibile	12 . 取り外し可能なフロントラジエーター/ファンブラケット
13 . Ventilador de entrada frontal	13 . Ventola di ingresso frontale	13 . フロント吸入ファン
14 . Cubierta de suelo extraíble	14 . Copertura del pavimento rimovibile	14 . 取り外し可能な床カバー
15 . Panel de malla frontal	15 . Pannello frontale in rete	15 . フロントメッシュパネル
16 . Panel de acero frontal	16 . Pannello frontale di acciaio	16 . フロントと強化ガラスパネル
1 . Panneau gauche en verre trempé	1 . Painel esquerdo em vidro temperado	1 . 左強化ガラスパネル
2 . Ventilateur d'échappement arrière	2 . Ventoinha de exaustão traseira	2 . 後部ファン
3 . Grand cache-câble	3 . Cobertura grande para cabos	3 . 大型ケーブルカバー
4 . Ventilateurs d'aspiration inférieurs (uniquement pour H9 Flow RGB+)	4 . Ventoinhas de entrada inferior (Apenas para H9 Flow RGB+)	4 . H9 Flow RGB+ 専用の底部吸気ファン
5 . Filtre inférieur	5 . Filtro inferiore	5 . 底部防塵網
6 . Module avant E/S	6 . Módulo E/S frontal	6 . 前部 I/O モジュール
7 . Panneau supérieur	7 . Painel superior	7 . 天板パネル
8 . Logement pour disque SSD/HDD	8 . Compartimento para SSD/HDD	8 . 固定硬盘/硬盘架
9 . Module de contrôle (Uniquement pour H9 Flow RGB+)	9 . Control Hub (apenas para H9 Flow RGB+)	9 . 控制中心（仅限H9 Flow RGB+）
10 . Panneau latéral droit	10 . Painel lateral direito	10 . 右边面板
11 . Support de montage SSD	11 . Staffa refrigeratore lato destro	11 . SSD 安装支架
12 . Support de radiateur/ventilateur avant amovible	12 . Suporte de ventoinha/radiador frontal removível	12 . 可拆卸的前置散热器/风扇支架
13 . Ventilateur d'admission avant	13 . Frente e entrada das ventoinha	13 . 前进气扇
14 . Revêtement de sol amovible	14 . Cobertura de chão removível	14 . 可拆卸的地板罩
15 . Panneau avant en filet	15 . Painel de malha frontal	15 . 前面板
16 . Panneau avant en acier	16 . Painel de aço frontal	16 . 前部钢化玻璃面板
1 . Linke Hartglasblende	1 . 좌측 강화 유리 패널	1 . 左側強化玻璃面板
2 . Lüfter für Luftauslass an Rückseite	2 . 후면 배기팬	2 . 後方排風扇
3 . Großes Kabelabdeckung	3 . 큰 케이블 커버	3 . 大型理線蓋板
4 . Unterseitige Lüfter (nur für H9 Flow RGB+)	4 . H9 Flow RGB+ 전용 바닥 흡입 팬	4 . 底部進風扇（僅限H9 Flow RGB+）
5 . Filter unten	5 . 하단 필터	5 . 底部防塵網
6 . E/A-Modul an der Vorderseite	6 . 전면 I/O 모듈	6 . 前方 I/O 模組
7 . Abdeckung oben	7 . 상단 패널	7 . 頂蓋
8 . SSD/HDD-Käfig	8 . SSD/HDD 케이지	8 . 固態硬碟/硬碟架
9 . Control Hub (nur für H9 Flow RGB+)	9 . 컨트롤 허브 (H9 Flow RGB+ 전용)	9 . 控制中心（僅限H9 Flow RGB+）
10 . Rechte Blende	10 . 우측 사이드 패널	10 . 右侧板
11 . SSD-Montagehalterung	11 . SSD 마운팅 브라켓	11 . SSD 安装支架
12 . Abnehmbare Radiator-/Lüfterhalterung vorn	12 . 탈착식 전면 라디에이터/팬 브래킷	12 . 可拆卸的前置散热器/风扇支架
13 . Lüfter für Lufteinlass an Vorderseite	13 . 전면 흡기팬	13 . 前方进风风扇
14 . Abnehmbarer Bodenbelag	14 . 분리 가능한 바닥 커버	14 . 可拆卸的地板覆盖物
15 . Mesh-Einsatz vorne	15 . 전면 메쉬 패널	15 . 前网板
16 . Frontstahlblende	16 . 전면 강철 패널	16 . 前部强化玻璃面板

02. CLEARANCES & SPECIFICATIONS

VISTA EXPLOSIONADA | DÉGAGEMENTS ET SPÉCIFICATIONS | ABSTÄNDE UND TECHNISCHE DATEN | SPAZI NECESSARI E SPECIFICHE DIMENSIÕES E ESPECIFICAÇÕES

간격과 규격 | 空間と仕様 | 间距与规格 | 間距與規格

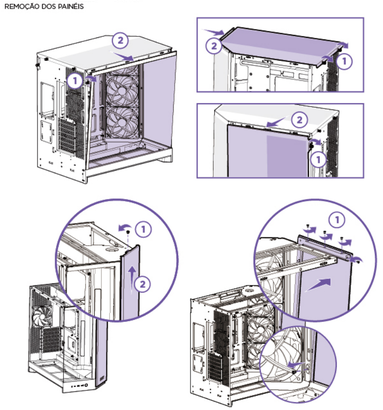


Motherboard Support	EATX (Up to 277 mm), ATX, Micro-ATX and Mini-ITX
Rear-Connecting Motherboard Support (BTF, Project Zero)	Yes (ATX, Micro-ATX)
2.5" SSD Support	4+2
3.5" HDD Support	2
Expansion Slots	7
CPU Cooler Height	Up to 165mm
GPU Length	Up to 459 mm (with <56 mm thickness fans installed at the front-right) Up to 490 mm (with 56 mm thick 420 mm AIO and fans installed at the front-right)
PSU Length	Up to 200mm
Top Radiator & Fan Thickness	Up to 80 mm (360 mm) Up to 62 mm (420 mm)
Placas base admitidas	EATX (Up to 277 mm), ATX, Micro-ATX and Mini-ITX
Soporte trasero para placa base (BTF, Project Zero)	Sí (ATX, Micro-ATX)
Unidad de estado sólido de 2,5"	4+2
Unidad de disco duro de 3,5"	2
Ranuras de expansión	7
Espacio para refr+D42:G42igerador del procesador	Hasta 165 mm
Espacio para gráfica	Hasta 459 mm (con ventiladores de hasta <56 mm de grosor instalados en la parte delantera-derecha) Hasta 490 mm (con AIO de 420 mm y ventiladores de 56 mm de grosor instalados en la parte delantera-derecha)
Longitud de la fuente de alimentación	Hasta 200 mm
Grosor del radiador y de los ventiladores superiores	Hasta 80 mm (360 mm) Hasta 62 mm (420 mm)
Cartes mère prises en charge	EATX (Up to 277 mm), ATX, Micro-ATX and Mini-ITX
Support de carte mère avec connexion arrière (BTF, Project Zero)	Oui (ATX, Micro-ATX)
SSD 2,5"	4+2
Disques durs 3,5"	2
Fentes d'expansion	7
Espace libre au niveau du refroidisseur de processeur	Jusqu'à 165 mm
Espace libre au niveau de la carte graphique	Jusqu'à 459 mm (avec des ventilateurs de 56 mm d'épaisseur installés à l'avant-droit) Jusqu'à 490 mm (avec un AIO de 420 mm et des ventilateurs de 56 mm d'épaisseur installés à l'avant-droit)
Longueur de l'alimentation	Jusqu'à 200 mm
Épaisseur du radiateur et des ventilateurs du haut	Jusqu'à 80 mm (360 mm) Jusqu'à 62 mm (420 mm)
Motherboard-Unterstützung	EATX (Up to 277 mm), ATX, Micro-ATX and Mini-ITX
Unterstützung für rückseitig anschließendes Motherboard (BTF, Project Zero)	Ja (ATX, Micro-ATX)
2,5-Zoll-SSD	4+2
3,5-Zoll-Festplatte	2
Erweiterungssteckplätze	7
Freiraum für CPU-Kühler	Bis zu 165 mm
Freiraum für GPU	Bis zu 459 mm (mit Lüftern bis 56 mm Dicke, die vorne rechts installiert sind) Bis zu 490 mm (mit 56 mm dickem 420 mm AIO und Lüftern, die vorne rechts installiert sind)
Länge des Netzteils	Bis zu 200 mm
Die Dicke des oberen Radiators & der Lüfter	Bis zu 80 mm (360 mm) Bis zu 62 mm (420 mm)
Scheda madre supportata	EATX (Up to 277 mm), ATX, Micro-ATX and Mini-ITX
Supporto per scheda madre con connessione posteriore (BTF, Project Zero)	Sì (ATX, Micro-ATX)
SDD 2,5"	4+2
HDD 3,5"	2
Alloggi d'espansione	7
Ingombro refrigeratore per CPU	Fino a 165mm
Ingombro per GPU	Fino a 459 mm (con ventole di spessore fino a 56 mm installate sulla parte anteriore destra) Fino a 490 mm (con un dissipatore a liquido di 420 mm e ventole di 56 mm di spessore installate sulla parte anteriore destra)
Lunghezza alimentatore	Fino a 200mm
Spessore dei radiatore e della ventola superiore	Fino a 80 mm (360 mm) Fino a 62 mm (420 mm)
Placa-principais suportadas	EATX (Up to 277 mm), ATX, Micro-ATX and Mini-ITX
Suporte para Motherboard com Conexão Traseira (BTF, Projeto Zero)	Sim (ATX, Micro-ATX)
SSD de 2,5"	4+2
HDD de 3,5"	2
Ranhuras de expansão	7
Espaço necessário para o refrigerador da CPU	Até 165 mm
Espaço necessário para a GPU	Até 459 mm (com ventoinhas de espessura até 56 mm instaladas na frente à direita) Até 490 mm (com AIO de 420 mm e 56 mm de espessura e ventoinhas instaladas na frente à direita)
Comprimento da fonte de alimentação	Até 200 mm
Espessura do Radiador e do Ventoinha Superior	Até 80 mm (360 mm) Até 62 mm (420 mm)
마더보드 지원	EATX (Up to 277 mm), ATX, Micro-ATX and Mini-ITX
뒤쪽 연결 메인보드 지원 (BTF, Project Zero)	네 (ATX, Micro-ATX)
2.5" SSD	4+2
3.5" HDD	2
확장 슬롯	7
CPU 쿨러 간격	최대 165mm
GPU 간격	앞쪽 오른쪽에 56mm 두께 팬을 설치했을 때 최대 459mm까지 가능해요(팬 두께 56mm 이하일 경우) 앞쪽 오른쪽에 56mm 두께의 420mm AIO와 팬을 설치했을 때는 최대 410mm까지 가능하죠.
PSU 길이	최대 200mm
상단 라디에이터 & 팬 두께	최대 80mm (360mm까지) 최대 62mm (420mm까지)
マザーボードサポート	EATX (Up to 277 mm), ATX, Micro-ATX and Mini-ITX
後部接続マザーボードサポート (BTF, プロジェクトゼロ)	はい (ATX, Micro-ATX) です。
2.5"SSDサポート	4+2
3.5"HDDサポート	2
エクスパンションスロット	7
CPUクーラーのクリアランス	最大 165 mm
GPUクリアランス	前右に設置されたファンの厚さが56mm未満の場合、最大459mmまで 前右に56mm厚の420mm AIOクーラーとファンを設置した場合、最大410mmまでです。
PSU 長さ	最大 200 mm
上部ラジエター&ファンの厚み	最大80mm (360mm用) 最大62mm (420mm用)
主板支持:	EATX (Up to 277 mm), ATX, Micro-ATX and Mini-ITX
后置连接主板支持（BTF · Project Zero）	是的（ATX · Micro-ATX）
2.5"SSD支持	4+2
3.5"HDD支持	2
扩充槽	7
CPU 散热器间隙	最大 165mm
GPU 间隙	最多可以容纳459毫米（前右方安装厚度小于56毫米的风扇时） 最多可以容纳410毫米（前右方安装56毫米厚420毫米AIO和风扇时）
PSU 长度	最大 200mm
顶部散热器和风扇厚度	最多80毫米（360毫米） 最多62毫米（420毫米）
主板支援:	EATX (Up to 277 mm), ATX, Micro-ATX and Mini-ITX
後置連接主機板支援（BTF · Project Zero）	是的（ATX · Micro-ATX）
2.5"SSD支援	4+2
3.5"HDD支援	2
擴充槽	7
CPU 散熱器間隙	最大 165mm
GPU 間隙	最多 459 mm（前右側安裝小於 56 mm 厚的風扇） 最多 490 mm（前右側安裝 56 mm 厚、420 mm AIO 及風扇）
PSU 長度	最大 200mm
頂部散熱器和風扇的厚度	最多 80 毫米（ 360 毫米 ） 最多 62 毫米（ 420 毫米 ）

03. PANEL REMOVAL

EXTRACCIÓN DE PANEL | RETRAIT DU PANNEAU | BLENDE ENTFERNEN | RIMOZIONE DEL PANNELLO | REMOÇÃO DOS PAINÉIS

패널 제거 | パネルの取り外し | パネルの取り外し | 移除面板



04. ACCESSORY BOX

CAJA DE ACCESORIOS | BOITE D'ACCESSOIRES | ZUBEHÖRSET | SCATOLA DEGLI ACCESSORI | CAIXA DE ACESSÓRIOS

악세사리 박스 | 部品箱（説明書入り） | 配件盒 | 零件盒

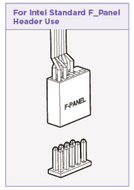
A	Hexagon Screw 6-32 x 6mm	x4	
B	Screw 6-32 x 5mm	x17	
C	Screw M3 x 5mm	x24	
D	Screw CB5 x 10mm	x36	
E	Standoff 6-32*8.5+4mm	x1	
F	Standoff Wrench	x1	
G	Small Cable Cover	x1	
H	Short Velcro	x3	
I	Cable ties	x15	

05. CABLE CONNECTIONS

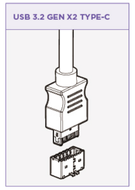
DISCO DE ADMINISTRACIÓN DE CABLES | CONNEXIONS DES CÂBLES | KABELVERBINDUNGEN | COLLEGAMENTI DEI CAVI | LIGAÇÕES DE CABOS

케이블 연결 | ケーブル接続 | 线缆连接 | 線路連接

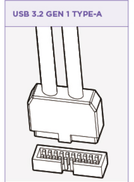
For Intel Standard F_Panel Header Use



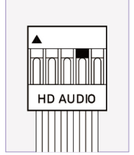
USB 3.2 GEN X2 TYPE-C



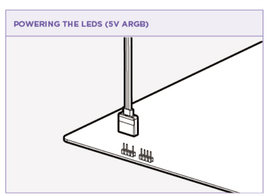
USB 3.2 GEN 1 TYPE-A



HD AUDIO



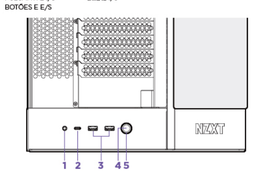
POWERING THE LEDS (5V ARGB)



06. BUTTONS & I/O

BOTONES Y E/S | BOUTONS ET E/S | TASTEN UND E/A | PULSANTI E I/O | BOTÕES E E/S

버튼 및 I/O | ボタンおよび I/O | 按钮和 I/O | 按鈕和 I/O

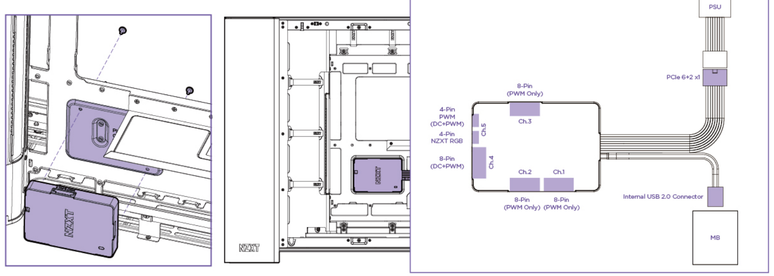


1 Headset Jack
2 USB 3.2 Gen2x2 Type-C
3 USB 3.2 Gen1 Type-A
4 Power Switch
5 Power LED

1 . Jack para auriculares	1 . Ingresso Cuffie	1 . ヘッドセットジャック
2 . USB 3.2 Gen2x2 Type-C	2 . USB 3.2 Gen2x2 Type-C	2 . USB 3.2 Gen2x2 Type-C
3 . USB 3.2 Gen1 Type-A	3 . USB 3.2 Gen1 Type-A	3 . USB 3.2 Gen1 Type-A
4 . Interruptor de encendido	4 . Interruttore d'alimentazione	4 . 電源スイッチ
5 . LED de alimentación	5 . LED alimentazione	5 . パワーLED
1 . Prise Casque	1 . Jack de fone de ouvido	1 . 耳机麦克风插孔
2 . USB 3.2 Gen2x2 Type-C	2 . USB 3.2 Gen2x2 Type-C	2 . USB 3.2 Gen2x2 Type-C
3 . USB 3.2 Gen1 Type-A	3 . USB 3.2 Gen1 Type-A	3 . USB 3.2 Gen1 Type-A
4 . Interrupteur marche/arrêt	4 . Interruptor de alimentação	4 . 电源开关
5 . Témoin d'alimentation	5 . LED de alimentação	5 . 电源LED
1 . Headset-Buchse	1 . 헤드셋 잭	1 . 耳機麥克風插孔
2 . USB 3.2 Gen2x2 Type-C	2 . USB 3.2 Gen2x2 Type-C	2 . USB 3.2 Gen2x2 Type-C
3 . USB 3.2 Gen1 Type-A	3 . USB 3.2 Gen1 Type-A	3 . USB 3.2 Gen1 Type-A
4 . Netzschalter	4 . 전원 스위치	4 . 電源開關
5 . Betriebs-LED	5 . 전원 LED	5 . 電源LED

07. CONTROL HUB

FLOW RGB+ (ONLY)



- The NZXT Control Hub is compatible with all NZXT RGB fans and lighting products. NZXT RGB channel supports a maximum of 40 LEDs. The 8-pin port(s) supports up to a total of 96 LEDs per channel.
- Please note to use the channels that support DC voltage fan control when connecting a 3-pin fan.
- Different types of lighting accessories (i.e., F-series RGB Fans, Aer RGB Fans, LED strip, etc.) cannot be mixed within a channel.

NOTE

- The Control Hub LED will flash twice continuously for 10 seconds and run the fans at 100% speed to indicate when the USB cable is disconnected.
- The Control Hub LED will blink continuously to indicate when the PCIe power cable is not connected.

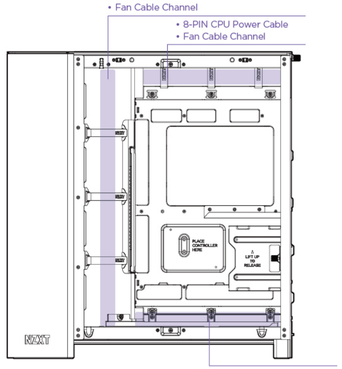
P05-0000045-V03

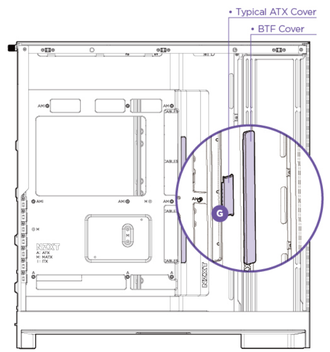
08. CABLE MANAGEMENT

BARRA PARA CABLES
BARRE DE CÂBLAGE
KABELSCHIENE
BARRA DEI CAVI
BARRA DE CABOS

케이블 바
ケーブルバー
理线挡板
整線擋板

- 24-PIN Motherboard Power Cable
- GPU Power Cable
- SATA Cable
- Fan Cable Channel

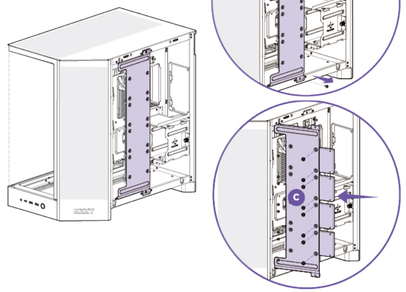




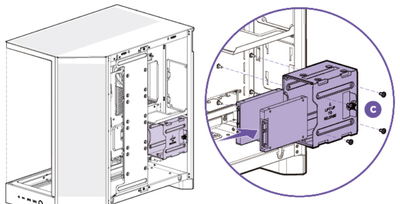
09. SSD DRIVE INSTALLATION

INSTALACIÓN DE LA UNIDAD DE DISCO DE ESTADO SÓLIDO
INSTALLATION DU DISQUE SSD
SSD-LAUFWERKSINSTALLATION
INSTALLAZIONE DELL'UNITÀ SDD
INSTALAÇÃO DA PLACA DE EXPANSÃO

SSD 드라이브 설치
SSD 装着
SSD 驱动器安装
SSD 安裝



C Screw M3 x 5mm

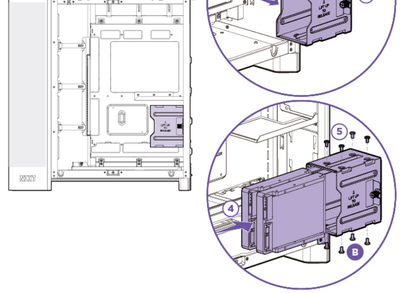


10. HDD DRIVE INSTALLATION

INSTALACIÓN DE LA UNIDAD DE DISCO DURO
INSTALLATION DE LECTEUR HDD
HDD-LAUFWERKSINSTALLATION
INSTALLAZIONE DELL'UNITÀ HDD
INSTALAÇÃO DA PLACA DE EXPANSÃO

HDD 드라이브 설치
HDD 装着
HDD 驱动器安装
HDD 硬碟安裝

B Screw 6-32 x 5mm

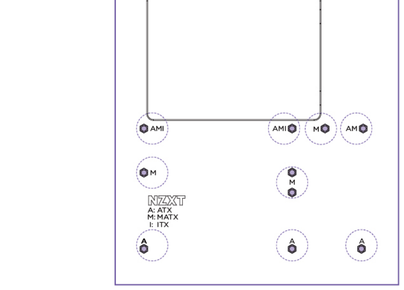


11. MOTHERBOARD INSTALLATION

INSTALACIÓN DE LA PLACA BASE
INSTALLATION DE LA CARTE MÈRE
INSTALLATION DER HAUPTPLATINE
INSTALLAZIONE DELLA SCHEDA MADRE
INSTALAÇÃO DA PLACA PRINCIPAL

마더보드 설치
マザーボードの装着
主板安装
主機板安裝

B Screw 6-32 x 5mm

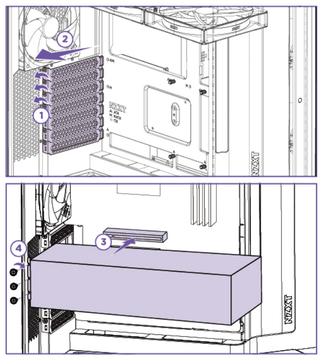


A : ATX
M : MATX
I : ITX

12. EXPANSION CARD INSTALLATION

INSTALACIÓN DE LA TARJETA DE EXPANSIÓN
INSTALLATION DE LA CARTE D'EXTENSION
INSTALLATION DER ERWEITERUNGSKARTE
INSTALLAZIONE DELLA SCHEDA D'ESPANSIONE
INSTALAÇÃO DA PLACA DE EXPANSÃO

확장 카드 설치
拡張カードの装着
扩展卡安装
擴充卡安裝

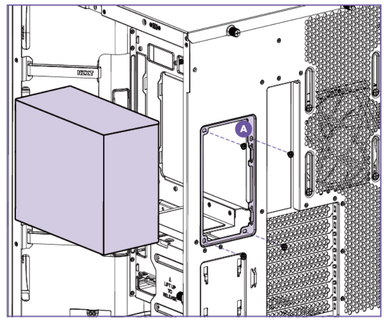


13. POWER SUPPLY INSTALLATION

INSTALACIÓN DE LA FUENTE DE ALIMENTACIÓN
INSTALLATION DE L'ALIMENTATION
INSTALLATION DER STROMVERSORGUNG
INSTALLAZIONE DELL'ALIMENTATORE
INSTALAÇÃO DA FONTE DE ALIMENTAÇÃO

전원공급장치 설치
電源の装着
电源安装
電源安裝

A Hexagon Screw 6-32 x 6mm

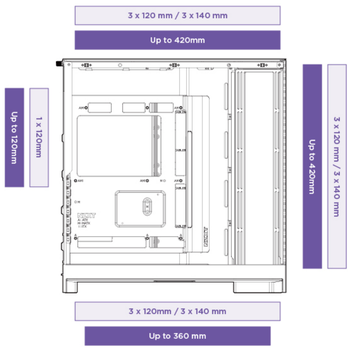


14. FAN & RADIATOR SUPPORT

COMPATIBILIDAD DE VENTILADORES Y RADIADORES
PRISE EN CHARGE DES RADIATEURS ET VENTILATEURS
LÜFTER- UND KÜHLER-UNTERSTÜTZUNG
SUPPORTO VENTOLE E RADIATORE
SUPORTE PARA VENTOINHA E A RADIADOR

팬 및 라디에이터 지원
対応ファンおよびラジエータ
风扇和散热器支持
風扇和散熱器支援

Fan
Radiator

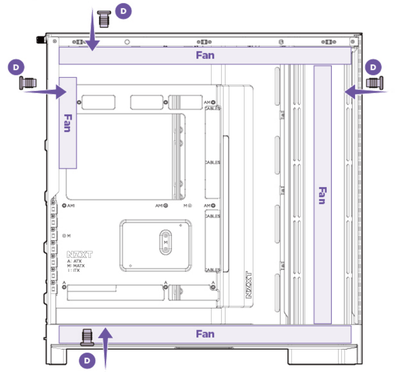


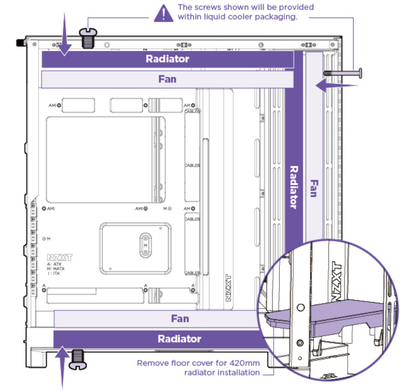
15. FAN & RADIATOR INSTALLATION

INSTALACIÓN DE VENTILADORES Y RADIADORES
INSTALLATION DES RADIATEURS ET VENTILATEURS
LÜFTER- UND KÜHLER-INSTALLATION
INSTALLAZIONE VENTOLE E RADIATORE
INSTALAÇÃO PARA VENTOINHA E A RADIADOR

팬 및 라디에이터 설치
ファンとラジエータの取り付け
风扇和散热器安装
風扇和散熱器安裝

D Screw CB5 x 10mm





限用物质及元素列表 / 限用物質及元素清單

产品名称：机箱，型號（型式）：CA-2401, CA-2403, CA-2404

有害物质及其化学符号

部件名称	铅(Pb)	镉(Cd)	汞(Hg)	六价铬(Cr⁺⁶)	多溴联苯(PBB)	多溴二苯醚(PBDE)
外壳	O	O	O	O	O	O
线材	O	O	O	O	O	O
主电路板	O	O	O	O	O	O
变压/适配	O	O	O	O	O	O
显影零件	O	O	O	O	O	O

本表格依据SJ/T 11364的规定编制。

O：表示该有害物质在该部件所有均质材料中的含量均在GB/T 26572规定的限量要求下。

X：表示该有害物质至少在该部件的某一均质材料中的含量超出 GB/T 26572 规定的 限量要求，然该部件仍符合欧盟命令 2011/65/EU 的规范。

產品名稱：機箱, 型號（型式）：CA-2401, CA-2403, CA-2404

限用物質及其化學符號

單元	鉛(Pb)	鎘(Cd)	汞(Hg)	六價鉻(Cr⁺⁶)	多溴聯苯(PBB)	多溴二苯醚(PBDE)
外殼	O	O	O	O	O	O
線材	O	O	O	O	O	O
主電路板	O	O	O	O	O	O
變壓器/適配	O	O	O	O	O	O
顯影零件	O	O	O	O	O	O

備考1. “超出0.1wt%”及“超出0.01wt%”係指限用物質之百分比含量超出百分比含量基準值。

備考2. “O”係指該項限用物質之百分比含量未超出百分比含量基準值。

備考3. “-”係指該項限用物質為無該項目。

P05-0000045-V03

REGULATORY STATEMENT

RACCOLTA CARTA PAP

Cet appareil, ses accessoires et cordons se recyclent
À DÉPOSER EN MAGASIN
OU
À DÉPOSER EN DÉCHÈTERIE

Points de collecte sur www.quefairedemesdechets.fr

UKCA DECLARATION OF CONFORMITY

The object of the declaration described above is in conformity with the relevant UK harmonization legislation:

- Electromagnetic Compatibility Regulations 2016
- The Restriction of the Use of Certain Hazardous Substances in Electrical and Electronic Equipment Regulations 2012

ROHS STATEMENT

This product is compliant to implemented RoHS (Restriction of Hazardous Substances) type regulations worldwide, including but not limited to China, India, Japan, Korea and European Union.

REACH STATEMENT

EU REACH SVHC Disclosure on Candidate List

REACH (Registration, Evaluation, Authorization and Restriction of Chemicals, EC 1907/2006) is the European Union's (EU) chemical substances regulatory framework. REACH requires NZXT Inc. to provide customers with sufficient information on Substances of Very High Concern (SVHC) contained in products in concentration above 0.1% weight by weight (w/w) to allow safe use of the product.

DECLARATION OF CONFORMITY

The device complies with the requirements set out in the Council Directives relevant Union harmonisation legislation:

- EMC Directive 2014/30/EU
- RoHS Directive 2011/65/EU & (EU) 2015/863

DÉCLARATION DE CONFORMITÉ

L'appareil est conforme aux exigences définies dans les directives du Conseil relatives à la législation d'harmonisation de l'Union :

- Directive EMC 2014/30/UE
- Directive RoHS 2011/65/UE et (UE) 2015/863

DECLARACIÓN DE CONFORMIDAD

El dispositivo cumple los requisitos impuestos en las directivas del Consejo relativas a la legislación de armonización de la Unión Europea:

- Directiva sobre compatibilidad electromagnética 2014/30/UE
- Directiva sobre sustancias peligrosas 2011/65/UE y (UE) 2015/863

DECLARAÇÃO DE CONFORMIDADE

O dispositivo está conforme aos requisitos das Diretivas do Conselho e relevante legislação de harmonização da União Europeia:

- Diretiva EMC 2014/30/UE
- Diretiva RoHS 2011/65/UE & (UE) 2015/863

DICHIARAZIONE DI CONFORMITÀ

Il dispositivo è conforme con i requisiti definiti nella Direttive del Consiglio relative alla Norma sull'armonizzazione dell'Unione:

- Direttiva EMC 2014/30/UE
- Direttiva RoHS 2011/65/UE e (UE) 2015/863

KONFORMITÄTSERKLÄRUNG

Das Gerät entspricht den Anforderungen der entsprechenden EU-Harmonisierungsrichtlinien das Rates:

- EMV-Richtlinie 2014/30/EU
- RoHS-Richtlinie 2011/65/EU & (EU) 2015/863

ЗАЯВЛЕНИЕ О СООТВЕТСТВИИ

Это устройство отвечает требованиям, изложенным в Директивах Совета о гармонизации соответствующих законов государств, входящих в состав Европейского союза (ЕС):

- Директива 2014/30/ЕU об электромагнитной совместимости
- Директива 2011/65/EU и (EU) 2015/863 об ограничении использования определенных видов опасных веществ в электрическом и электронном оборудовании (RoHS)

OŚWIADCZENIE ZGODNOŚCI

Urządzenie jest zgodne z wymaganiami określonymi w odpowiednich unijnych Dyrektywach harmonizacyjnych Rady:

- Dyrektywa EMC 2014/30/UE
- Dyrektywa RoHS 2011/65/UE i (UE) 2015/863

UYUM BEYANI

Aşağıdaki Yönergeleri ile ilgili Birlik uyum mevzuatında belirtilen şartlara uygundur:

- EMC Yönergesi 2014/30/EU
- RoHS Yönergesi 2011/65/EU & (EU) 2015/863

OVERENSSTEMMELSESERKLÆRING

Enheden er i overensstemmelse med kravene i Rådets direktiv, relevant til EU's lovgivning om harmonisering:

- EMC-direktiv 2014/30/EU
- RoHS-direktiv 2011/65/EU og (EU) 2015/863

VAATIMUSTENMUKAISUUSVAKUUTUS

Laite on Euroopan neuvoston direktiivien olennaisen unionin harmonisointilainsäädännön vaatimusten mukainen:

- EMC-direktiivi 2014/30/EU
- RoHS-direktiivi 2011/65/EU & (EU) 2015/863

SAMSVARSERKLÆRING

Enheten overholder kravene i EU-rådets harmoniseringsdirektiver:

- EMC-direktiv 2014/30/EU
- RoHS-direktiv 2011/65/EU & (EU) 2015/863

KONFORMITETSDEKLARATION

Enheten uppfyller kraven som anges i Rådets direktiv relevanta harmoniseringslagstiftning för Europeiska unionen:

- EMC-direktivet 2014/30/EU
- RoHS-direktivet 2011/65/EU & (EU) 2015/863

DECLARAȚIE DE CONFORMITATE

Dispozitivul respectă cerințele menționate în Directivele Consiliului și în legislația armonizată relevantă la nivelul Uniunii:

- Directiva privind compatibilitatea electromagnetică 2014/30/UE
- Directiva RoHS 2011/65/UE și (UE) 2015/863

ПРОХЛАШЕНИ О ЅНОСНОСТ

Заўдаеві одбојовіѕ роздавьи/ким ѕановенуйм ѵе ѕмѣнюіѕ Радў подбв ріѕьіпуіісіѕ нармоніzасічніісіѕ рґавніісіѕ Уніе:

- Ѕмѣнісо о електромагнеціскіѕ компатібілітіѕ 2014/30/ЕU
- Ѕмѣнісо о RoHS 2011/65/EU а (EU) 2015/863

VERKLARING VAN OVEREENSTEMMING

Het apparaat voldoet aan de vereisten van de relevante richtlijnen van de Raad met betrekking tot harmonisatiewetgeving in de Unie:

- EMC-richtlijn 2014/30/EU
- RoHS-richtlijn 2011/65/EU & (EU) 2015/863

MEGFELELŐSÉGI NYILATKOZAT

Az eszköz megfelelő a Tanács irányelvek releváns uniós harmonizációs rendelkezéseit által felállított követelményeknek:

- 2014/30/EU EMC-irányelv
- 2011/65/EU és (EU) 2015/863 RoHS-irányelv

ДЕКЛАРАЦИЯ ЗА СЪОТВЕТСТВИЕ

Устройството отговаря на изискванията на унионното законодателство на Съюза за хармонизация на директивите на Съвета:

- ЕМС директива 2014/30/ЕС
- RoHS директива 2011/65/ЕС & (ЕС) 2015/863

DEKLARACIJA O USKLAĐENOSTI

Ovaj uređaj sukladan je s odredbama postavljenim u direktivama Vijeća vezanim uz relevantne harmonizacijske zakone Unije:

- EMC Direktiva 2014/30/EU
- RoHS Direktiva 2011/65/EU & (EU) 2015/863

ΔΗΛΩΣΗ ΣΥΜΜΟΡΦΩΣΗΣ

Η συσκευή συμμορφώνεται με τις απαιτήσεις που καθορίζονται στις Οδηγίες του Ευρωπαϊκού Συμβουλίου και σχετίζονται με τη νομοθεσία περί εναρμονίσεως της Ένωσης:

- Οδηγία περί ΗΜΣ 2014/30/ΕΕ
- Οδηγία περί RoHS 2011/65/ΕΕ & (ΕΕ) 2015/863

To protect the global environment and as an environmentalist, NZXT must remind you that:

Under the European Union ("EU") Directive on Waste Electrical and Electronic Equipment, Directive 2002/96/EC, which takes effect on August 13, 2005, products of "electrical and electronic equipment" cannot be discarded as municipal waste anymore and manufacturers of covered electronic equipment will be obligated to take back such products at the end of their useful life. NZXT will comply with the product take back requirements at the end of life of NZXT-branded products that are sold into the EU. You can return these products to local collection points.

En tant qu'écologiste et afin de protéger l'environnement, NZXT tient à rappeler ceci:

Au sujet de la directive européenne (EU) relative aux déchets des équipement électriques et électroniques, directive 2002/96/EC, prenant effet le 13 août 2005, que les produits électriques et électroniques ne peuvent être déposés dans les décharges ou tout simple-ment mis à la poubelle. Les fabricants de ces équipements seront obligés de récupérer certains produits en fin de vie. NZXT prendra en compte cette exigence relative au retour des produits en fin de vie au sein de la communauté européenne. Par conséquent vous

pouvez retourner localement ces matériels dans les points de collecte.

NZXT GLOBAL WARRANTY POLICY

This NZXT Global Warranty Policy governs the sale of products by NZXT to you.

I. WARRANTY LENGTH

New NZXT Product	Warranty Length for Parts
Computer Cases	2 Years

Any replacement product will be covered under warranty for the remainder of the warranty period or thirty days, whichever is longer. Proof of purchase is required for warranty service.

II. WHO IS PROTECTED

The Warranty covers only NZXT products purchased by the original consumer.

III. WHAT IS AND IS NOT COVERED

Please note that our warranty is not an unconditional guarantee. If the product, in NZXT's reasonable opinion, malfunctions within the warranty period, NZXT will provide you at its sole discretion with a repaired or replacement product, either new or refurbished, with a similar function that is equal or greater in value depending on supply. Our warranty does not cover the following:

- any product or serial number/warranty sticker modification applied without permission from NZXT;
- any damage that is not a manufacturing defect;
- damage, deterioration or malfunction resulting from: accident, abuse, misuse, neglect, fire, water, lightning, or other acts of nature, unauthorized product modification or failure to follow instructions included with the product;
- improper installation, unauthorized alterations or modifications, or repair or attempted repair by anyone not authorized by NZXT;
- shipping or transport damage (claims must be made with the carrier);
- normal wear and tear.

NZXT does not warrant that this product will meet your requirements. It is your responsibility to determine the suitability of this product for your purpose. For NZXT Store orders, we cover two way return shipping for all exchanges and returns. For all other authorized dealers, NZXT Support does not cover return shipping and only covers one way shipping from NZXT back to the end user for exchanges. Two way expedited shipping is provided for all PSUs covered under the Less Than Three program, indiscriminate of purchase location, provided the location is an approved NZXT reseller.

IV. EXCLUSION OF DAMAGES (DISCLAIMER)

NZXT's sole obligation and liability under this warranty is limited to the repair or replacement of a defective product with either a new or refurbished product with a similar function that is equal or greater in value at our option. NZXT shall not, in any event, be liable for any incidental or consequential damage, including but not limited to damages resulting from interruption of service and loss of data, business, or for liability in tort relating to this product or resulting from its use or possession.

V. LIMITATIONS OF IMPLIED WARRANTIES

There are no other warranties, expressed or implied, including but not limited to those of merchantability or fitness for a particular purpose. The duration of implied warranties is limited to the warranty length specified in Paragraph I.

VI. TO OBTAIN TECHNICAL SUPPORT

If you have already referenced your product owner's manual and still need help, you may contact us by phone at +1 (800) 228-9395, by email at service@nzxt.com, or visit the NZXT Support site at nzxt.com/customer-support.

VII. HOW TO OBTAIN A WARRANTY SERVICE FROM NZXT

To receive a warranty service for your product when purchased directly from NZXT, you must submit a request via the NZXT Support site outlining the problem. If a technician deems the product defective or requiring testing, you will be required to provide a copy of your proof of purchase, which will enable you to submit a Return Merchandise Authorization "RMA" request.

Once approved, you´ll receive an RMA number, upon which you will be asked to ship the defective item back to NZXT with the RMA number clearly marked or labelled on the package. NZXT recommends that appropriate measures are taken to safeguard the product from damage during shipping.

VIII. APPLICABLE LAW AND ADDITIONAL LEGAL RIGHTS FOR CONSUMERS

This warranty gives you specific legal rights. These conditions are governed and construed in accordance with the laws of California (with exception of its conflict of law provisions), and the application of the United Nations Convention of Contracts for the International Sale of Goods is expressly excluded. The non-exclusive jurisdiction of the courts of California is agreed, which means that you may bring a claim to enforce your consumer protection rights in connection with this Global Warranty in the country which you have your habitual residence where you may have additional rights. These rights may vary.

For original consumers who are covered by consumer protection laws or regulations in their country, state, or province of purchase or, if different, their country, state, or province of residence, the benefits conferred by this warranty are in addition to all rights and remedies conveyed by such consumer protection laws and regulations. To the extent that liability under such consumer laws can be limited, NZXT's liability is limited, and its sole option, to repair or replacement, either new or refurbished, with a similar function that is equal or greater in value depending on supply.

In the United Kingdom:

- For NZXT products sold to customers in the UK, during the expected lifespan of your product your legal rights entitle you to the following:
  - > Up to 30 days: if your goods are faulty, then you can get an immediate refund.
  - > Up to six months: if your goods can't be repaired or replaced, then you're entitled to a full refund, in most cases.
  - > Up to six years: if your goods do not last a reasonable length of time you may be entitled to some money back.
- If the person seeking to rely on the guarantee is not the original consumer, the NZXT Warranty will cover the product in relation to that person provided that they are able to provide proof of the transfer of the benefit of the guarantee from the original consumer.
- The implied warranties under the Consumer Rights Act 2015 says that your goods must be as described, fit for all purposes for which such goods are usually supplied, and of satisfactory quality.

In the EU:

- If you are a consumer and have your habitual residence in the EU, you additionally enjoy the protection afforded to you by provisions that cannot be derogated from by agreement by virtue of the law where you have your habitual residence.

IX. WARRANTY SERVICE FROM RESELLERS

In the event that a warranty service is sought, you must provide proof of purchase (store receipt or invoice) in order to receive the service and if deemed necessary, repair or replacement product.

In North America:

Within the first 60 days after purchase, please return your product (or for power supplies installed within our enclosures, just the failed power supply) to your dealer or reseller for a replacement. If the product is still within warranty and you can no longer return it to your dealer, please contact NZXT Customer Support (see above) for assistance and instructions. NZXT will not accept returns without prior approval and an RMA number.

In Europe:

Within the first year after purchase, please return your product (or for power supplies installed within our enclosures, just the failed power supply) to your dealer or reseller for a replacement. If the product is still within warranty and you can no longer return it to your dealer, please contact NZXT Customer Support (see above) for assistance and instructions. NZXT will not accept returns without prior approval.

In Australasia:

Within the first two years after purchase, please return your product (or for power supplies installed within our enclosures, just the failed power supply) to your dealer or reseller for a replacement. If the product is still within warranty and you can no longer return it to your dealer, please contact NZXT Customer Support (see above) for assistance and instructions. NZXT will not accept returns without prior approval.
The cost of shipping will be borne at the first instance by you; however, if the purchased item is defective, NZXT will reimburse reasonable postage or transportation of costs.

Outside North America, Europe, and Australasia:

If your product needs to be returned within the warranty period, please contact the retailer or distributor from whom you purchased the product.

X. NZXT.COM STORE RETURNS/EXCHANGE POLICY

Eligible products under this NZXT Warranty qualify for a full refund or exchange only with an authorized RMA number and if the item is returned to the NZXT.com store inventory within 30 days of purchase. Returns are not allowed beyond 30 days of the purchase date. The NZXT.com Store reserves the right to deny any return or exchange. Refunds will be credited to the original method of payment. To initiate a return, simply submit a request via NZXT support site.

> Visit nzxt.com/warranty and support.nzxt.com for information on warranty coverage and service.
> Visite el sitio Web nzxt.com/warranty y support.nzxt.com para obtener información sobre la cobertura y el servicio de la garantía.
> Visitez nzxt.com/warranty et support.nzxt.com pour les informations de la couverture de la garantie et du service.
> Informationen zu Geltungsbereich und Service der Garantie finden Sie unter support.nzxt.com und nzxt.com/warranty.
> Visitare il sito nzxt.com/warranty e support.nzxt.com per informazioni sulla copertura e sul servizio della garanzia.
> Visite nzxt.com/warranty e support.nzxt.com para obter informações sobre a cobertura da garantia e assistência.
> 제품 보증 범위와 서비스 정보를 확인하시려면 nzxt.com/warranty 또는 support.nzxt.com 을 방문해 주시기 바랍니다.
> 保証範囲およびサービスに関する情報については、support.nzxt.com と nzxt.com/warranty にアクセスしてください。
> 请描述 nzxt.com/warranty 和 support.nzxt.com 了解保修范围和服务的信息。
> 請訪問 nzxt.com/warranty 和 support.nzxt.com 了解產品保固範圍和更多服務訊息。

Scan the QR code or visit nzxt.com product page to view or download the full manual.

NZXT, Inc. | 605 E Huntington Drive, Suite 212, Monrovia, CA 91016 USA
NZXT Europe GmbH | Ammerthalstrasse 32 Kirchheim bei Muenchen 85551, Germany
NZXT UK Ltd. | First Floor 5 Fleet Place London EC4M 7RD, GB United Kingdom
+1 (800) 228-9395 / service@nzxt.com / nzxt.com